7929 SW Burns Way
Suite B
Wilsonville, OR

Phone: 503 344-5085
Fax: 503 682-9014
sales@rinehartmotion.com

Setting up the PM Controller to run with Remy Motors

Revision 1.2

7929 SW Burns Way
Suite B
Wilsonville, OR

Phone: 503 344-5085
Fax: 503 682-9014
sales@rinehartmotion.com

Table of Contents

1. INTRODUCTION **3**

2. SETTING THE 'MOTOR TYPE' **7**

2.1 RECOMMENDED SETTINGS FOR PARAMETERS 9

7929 SW Burns Way
Suite B
Wilsonville, OR

Phone: 503 344-5085
Fax: 503 682-9014
sales@rinehartmotion.com

1. Introduction

This document describes the multiple types of Remy motors. It also describes the process to set up the motor type.

Currently, following Remy motor and controller configurations are supported:

Motor	Controller Configuration
HVH250-060S	PM100DX & 320V Battery
HVH250-090S	PM100DX & 320V Battery
HVH250-090P	PM100DX, PM100DXR, PM150DX & 320V Battery
HVH250-115S	PM100DX & 320V Battery
HVH250-115P	PM100DX, PM100DXR, PM150DX & 320V Battery
HVH410-150P*	PM100DX, PM100DXR, PM150DX & 320V Battery
HVH410-150S*	PM100DX & 320V Battery
HVH250-115S @ 650V	PM100DZ, PM150DZ, & 650V Battery
HVH250-115P @ 650V	PM100DZ, PM150DZ, & 650V Battery

* as of 8/3/12 this motor is unverified as to its performance.

Note: 320V Battery represents the nominal configuration point. The controller will automatically scale operation for battery voltages between 250V and 400V. However, the motor performance will be diminished as the battery voltage is less than nominal.

There are two sets of connections between the motor and the controller, the resolver/temperature sensor and the motor power leads. Both must be done properly for the motor to operate correctly.

The Remy motors can come in several different form factors. The motor can come in its “cartridge” form that includes a steel housing that goes around the stator and does not include a motor shaft (see Figure 2). It can also come housed in an Aluminum case that includes a motor shaft (see Figure 3).

The resolver connector that comes standard with the cartridge version is a 10 pin Delphi connector. The connector can come in various keying options. The color of connector can also be different (cream, blue, and black). Regardless of the color of connector body the connection pin-out between this Delphi connector and the controller are the same.

Refer to Figure 1 below for the connections between the Remy Motor and the controller when the Delphi 10 pin connector is used.. A resistor (Rpu) must be added for the Remy temperature sensor to work properly. This resistor must be

7929 SW Burns Way
Suite B
Wilsonville, OR

Phone: 503 344-5085
Fax: 503 682-9014
sales@rinehartmotion.com

1.00K ohm, 1% tolerance. The power rating of the resistor is not critical. Refer to the PM100 User's Manual for more information on the controller connectors.

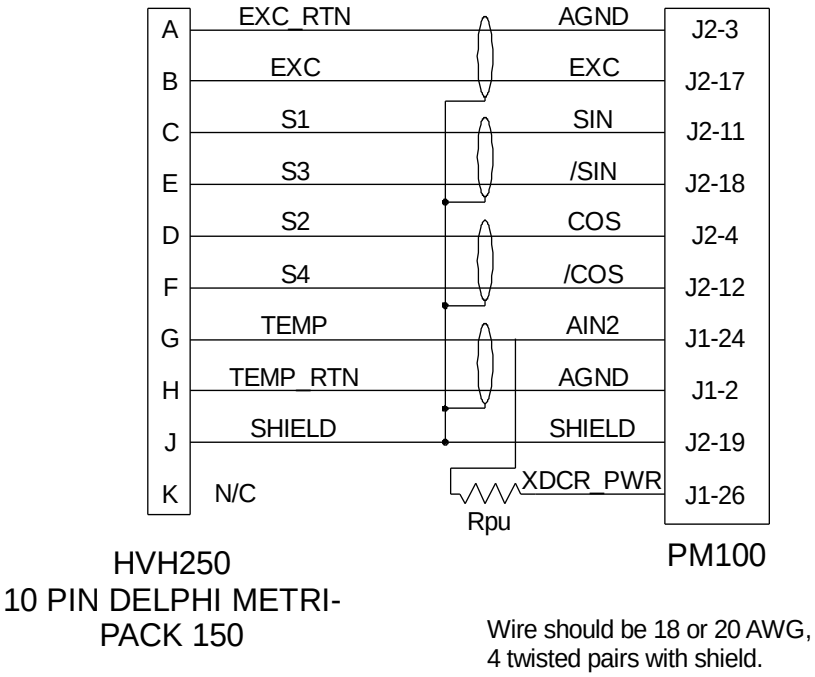

Figure 1: Resolver Connections

The motor cables must be connected in a specific order between the Remy motor and the PM100DX. Figure 2 shows the connection designations on the Remy motor for the EP8 cartridge. This picture shows the rear of the motor (opposite the shaft side of the motor).

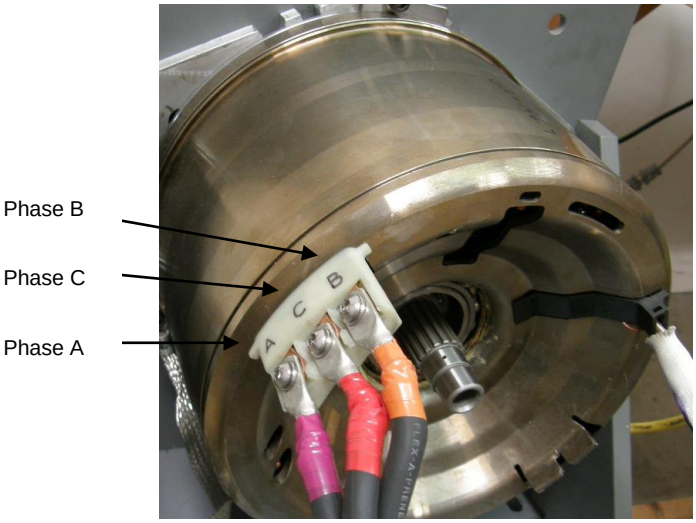

Figure 2:
Remy Motor Connections

7929 SW Burns Way
Suite B
Wilsonville, OR

Phone: 503 344-5085
Fax: 503 682-9014
sales@rinehartmotion.com

There is a newer revision to the Remy cartridge than what is shown in Figure 2. The newer revision has a new plastic terminal block. The motor phase designations are imprinted into the plastic of the terminal block. Please use these designations when connecting the power leads from the Remy motor to the controller. Refer to the PM100 User's Manual for the corresponding phase designations on the PM100DX controller.

The Remy motor can also come with its own housing as shown in Figure 3. The assumed rotation direction for the Remy motor is shown in the picture below. This sets the counter-clockwise direction as forward and clockwise as reverse while facing the shaft of the motor.

Figure 3: Remy Motor Housing with shaft

The housing uses a different connector than the cartridge. The connector is Amphenol D38999/20FD15PN. The mating connector is Amphenol D38999/26FD15SN. The mating connector is available from RMS (p/n 86-0100).

Remy Pin	RMS PMxxx Pin	Function
A	J2-3	Excitation negative
B	J2-17	Excitation positive
C	J2-11	SIN positive
D	J2-4	COS positive
E	J2-18	SIN negative
F	J2-12	COS negative
G	J1-24	Temperature sensor, AIN2

7929 SW Burns Way
Suite B
Wilsonville, OR

Phone: 503 344-5085
Fax: 503 682-9014
sales@rinehartmotion.com

H	J1-2	Temperature sensor , AGND
J	J1-19	Shield
K	Safety cover switch	n/a
L	Safety cover switch	n/a
M-R	Spare	n/a

Note that for the controller to properly measure the motor temperature a 1.00K ohm pull-up resistor must be provided between Pin G/J1-24 and XDCR_PWR (J1-26, also available on other pins). Please see the information above for more description of the resistor.

The Remy motors are now offered with a third connector option. This connector is a 18 pin Tyco Connector.

Remy Pin	RMS PMxxx Pin	Function
1	J2-3	Excitation negative
10	J2-17	Excitation positive
12	J2-11	SIN positive
11	J2-4	COS positive
3	J2-18	SIN negative
2	J2-12	COS negative
9	J1-24	Temperature sensor, AIN2
18	J1-2	Temperature sensor , AGND
5	J1-19	Shield

** Please note that Remy documents may refer to the SIN/COS signals differently than the RMS documents. Please use the RMS documents when connecting the inverter and the motor.

7929 SW Burns Way
Suite B
Wilsonville, OR

Phone: 503 344-5085
Fax: 503 682-9014
sales@rinehartmotion.com

2. Setting the 'Motor Type'

The PM100DX firmware has the ability to drive several different motor types. The user must tell the controller what type of motor it is to be used with. This is done via the Motor_Type_EEPROM parameter. Refer to the Programming EEPROM Parameters using GUI manual for more information on programming EEPROM parameters. For the Remy Motors the following motor types are used:

Model	Motor Type
HVH250-090S	1
HVH250-090P	11
HVH250-060S	29
HVH250-115S	31
HVH250-115P	36
HVH410-150P	39
HVH410-150S	46
HVH250-115S @650V	56
HVH250-115P @650V	58

When you set the motor type via the GUI it will automatically adjust some default parameters. However, there are several additional parameters that should be reviewed and adjusted if desired.

EEPROM Parameter	Description
Veh_Flux_EEPROM_(Wb)_x_1000	This is the back EMF (flux) constant for the motor. It will automatically default to the correct value when the motor type is changed. There is no need to change this.
IQ_Limit_EEPROM_(Amps)_x_10	This parameter sets the maximum value of the torque producing current that can be commanded. The amount of allowable current is dependent on the motor type and the controller type. The current is set in peak Amps times 10. For example, 300 A_{rms} = 4250.
ID_Limit_EEPROM_(Amps)_x_10	This parameter sets the maximum amount of field weakening current.
Mtr_OverTemp_Limit_EEPROM_(C)_x_10	This parameter sets the motor over-temperature fault limit. It is set in degrees C times 10. Thus for 150°C it would be set to 1500. It would be wise to set this parameter so that if a cooling system failure occurs it would fault immediately.

7929 SW Burns Way
Suite B
Wilsonville, OR

Phone: 503 344-5085
Fax: 503 682-9014
sales@rinehartmotion.com

Motor_Overspeed_EEPROM_(RPM)	This parameter sets the speed at which an over-speed fault will be generated. It should be set based on the needs of the vehicle system for over-speed protection.
Max_Speed_EEPROM_(RPM)	This parameter sets the maximum speed that the controller will command.
Break_Speed_EEPROM_(RPM)	The Break Speed is the speed at which the torque capability of the motor starts to decrease due to lack of voltage from the motor controller. This value should be set based on information from either RMS or Remy on the performance of the motor with the particular battery voltage being used.
Motor_Torque_Limit_EEPROM_(Nm)_x_10	This sets the maximum torque command when operating in VSM mode.
Regen_Torque_Limit_EEPROM_(Nm)_x_10	This sets the maximum regen torque command when operating in VSM mode.

7929 SW Burns Way
Suite B
Wilsonville, OR

Phone: 503 344-5085
Fax: 503 682-9014
sales@rinehartmotion.com

2.1 Recommended Settings for Parameters

The table below shows the RMS recommended settings for the parameters that are motor specific. There are many factors that may influence a decision to deviate from these settings. If there are questions about setting please contact either RMS or Remy for more information. These settings are derived from data provided by Remy to RMS.

Remy Motor	Inverter	Battery	Vehicle Flux	IQ Limit	ID Limit	Motor Over-speed	Break Speed	Torque Limit (Motor/Regen)
		Volts	*Weber*	*A (pk)*	*A (pk)*	*RPM*	*RPM*	*N.m.*
HVH250 090S	PM100DX	320	*	425	425	10,000	2,250	330
HVH250 090P	PM100DX	320	*	425	425	10,000	4,500	160
	PM100DXR PM150DX	320	*	566	566	10,000	4500	210
HVH250 060S	PM100DX	320	*	425	425	10,000	3,200	210
HVH250 060P								
HVH250 115S	PM100DX	320	*	425	425	10,000	1700	410
	PM150DZ	650	*	425	425	10,000	3400	410
HVH250 115P	PM100DX	320	*	495	495	10,000	3500	250
	PM150DZ	650	*	425	425	10,000	8500	210
HVH410 150S	PM100DX	320	*	425	425	10,000	300	2000
HVH410 150P	PM100DX	320	*	425	425	10,000	900	1250
	PM100DXR PM150DX	320	*	566	566	10,000	800	1600

* Do not change the Veh_Flux level from the default that is set when the motor type is changed.

7929 SW Burns Way
Suite B
Wilsonville, OR

Phone: 503 344-5085
Fax: 503 682-9014
sales@rinehartmotion.com

Revision History

Version	Description of Versions / Changes	Responsible Party	Date
0.1	Initial version	Chris Brune	5/24/2011
0.2	-	-	-
0.3	-	-	-
0.4	Separated the calibration process as a new document, “RMS Resolver Calibration Process”.	Azam Khan	6/14/2011
0.5	Added HVH250-115S, motor type 31.	Azam Khan	7/18/2011
0.6	Added detail on parameter setup	Chris Brune	7/26/2011
0.7	Added picture to show the direction of rotation of a Remy motor. Added HVH250-115P, motor type 36.	Azam Khan	10/26/2011
0.8	Added HVH410-150S, motor type 46. Added HVH410-150P motor type 39	Chris Brune	08/03/2012
0.9	Added information on Remy Resolver connector	Chris Brune	10/12/2012
1.0	Added information on Remy Tyco rectangular connector	Chris Brune	11/1/2012
1.1	Added HVH250-115S @650V	Azam Khan	4/30/2013
1.2	Added HVH250-115P @650V	Azam Khan	6/5/2013